ECO BOOST

Permanent Magnet Frequency Conversion Self-Priming Peripheral Pump

ebitt
FLUID TECHNOLOGIES







ECO BOOST is a permanent magnet frequency converted self priming peripheral pump.

- **Super Silent:** Unique fluid noise reduction technology, efficient and silent permanent magnet motor technology, greatly reduce the working noise of the pump to a minimum 30-50 decibels.
- **Convenient Disassembly:** Without the need to disassemble the pipeline, the four screws on the casing can be removed for maintenance and repair.
- **Multiple Protections:** IP55 protection level ensures the safe operation of the water pump outdoors, including leakage warning, water shortage protection, voltage protection and temperature control provide users with a safer and more reliable water experience.

LOW NOISE SUPER-CHARGE

High efficiency, low noise

ENERGY SAVING AND ENVIRONMENTAL PROTECTION

Energy and power saving, excellent and efficient

ebitt
FLUID TECHNOLOGIES

CURVE DIAGRAM & TECHNICAL PARAMETERS



Curve diagram

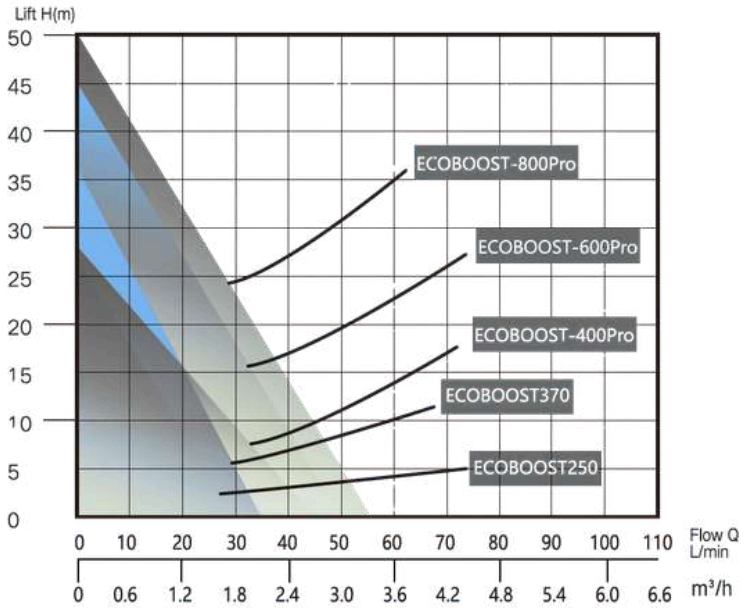





Model	ECO BOOST 250	ECO BOOST 370	ECO BOOST 400 Pro	ECO BOOST 600 Pro	ECO BOOST 800 Pro
Voltage	180-200V/	180-200V/	165-260V/	165-260V/	165-260V/
Frequency	50 Hz	50 Hz	50 Hz / 60 Hz	50 Hz / 60 Hz	50 Hz / 60 Hz
Power	250W	370W	400W	600W	800W
Rated Flow	1.2 m^3/h	1.2 m^3/h	1.5 m^3/h	2 m^3/h	2 m^3/h
Rated Lift	12 m	17 m	16 m	25 m	30 m
Max. Flow	1.8 m^3/h	2.1 m^3/h	2.6 m^3/h	3 m^3/h	3.3 m^3/h
Max. Lift	26 m	36 m	28 m	45 m	52 m
Max. Suction Lift	8 m	8 m	8 m	8 m	8 m
Isolation	F	F	F	F	F



EXTERNAL DIMENSIONS DIAGRAM

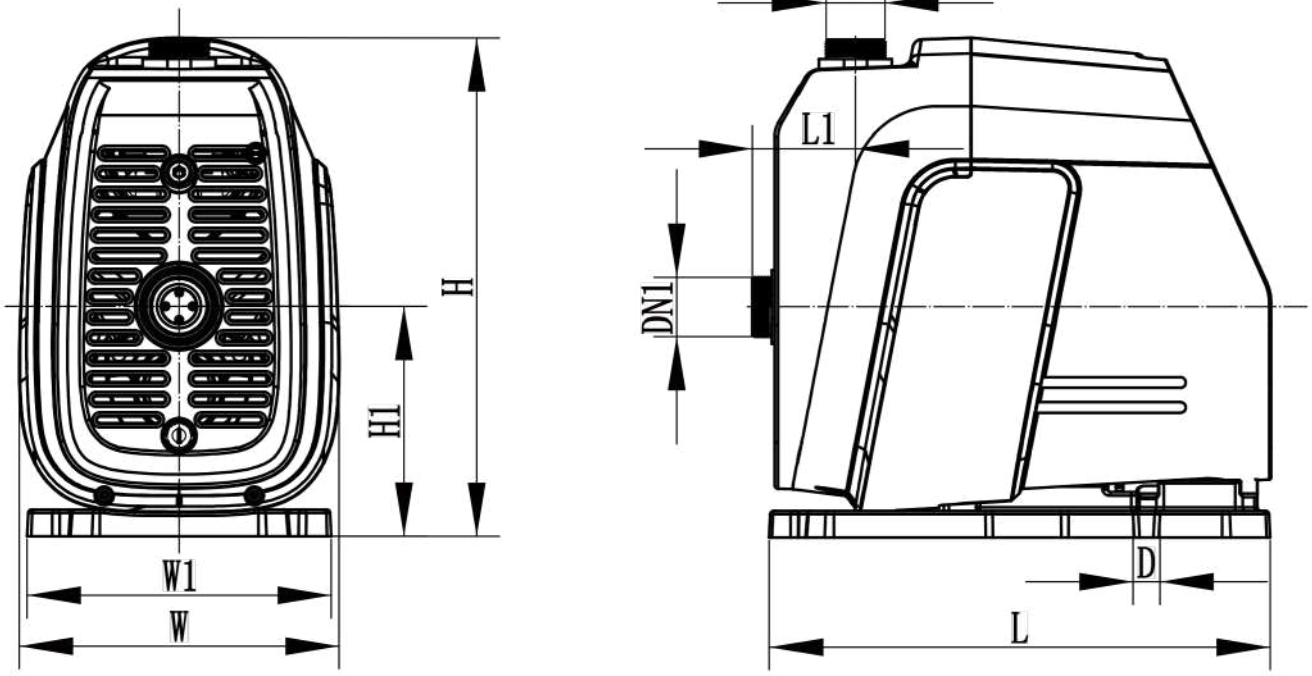

PERMANENT MAGNET PUMP HEAD



PRECAUTIONS TO CHECK BEFORE INSTALLATION

- Sealing Ring (mouth ring) clearance
- Sealing Ring and shaft sleeve radial beating
- Bearing and Bearing Room
- Shaft Seal Inspection: Mechanical seal form and model whether meet the requirements of the contract, whether the washing, filtering and cooling pipe installation is correct or not, if the packing is sealed, the packing should be packed seperately and filled on the spot.
- Check whether the cooling water pipeline is blocked, it should be cleaned and kept unobstructed.

POINTS FOR ATTENTION IN FIXED INSTALLATION

- Fixed with screws to reinforce
- The base plate according to a certain distance has the screw bayonet, after the pump group leveling qualified, fastens the anchor bolt, tightens the torque and the bolt axial tension stress conforms to the standards or the stipulation request.

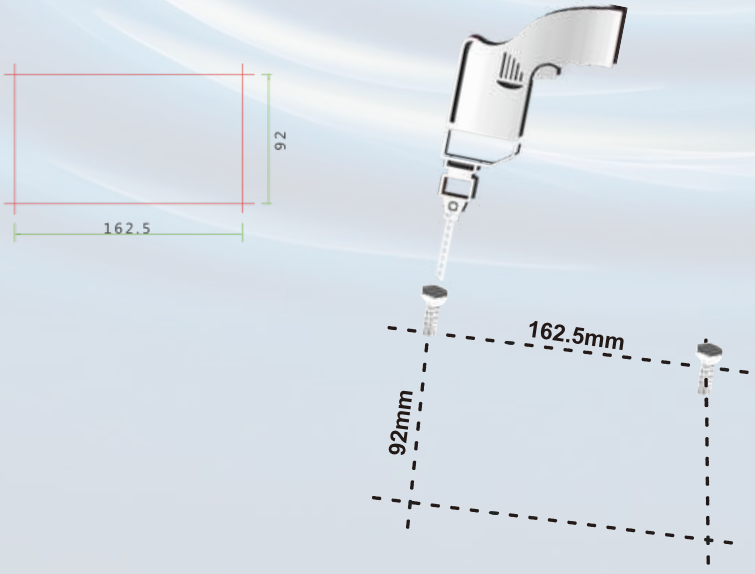

POINTS FOR ATTENTION IN PIPING INSTALLATION





- No water pressure inlet pipe, the first installation of the pump must add water, water before the first screw-off and the inject a certain amount of water.
- The installation of water pump, the water inlet line is prohibited to use too soft rubber pipe to avoid sucking flat.
- The front ready to install the pipeline, fixed outlet.

PRECAUTIONS FOR INSTALLATION OF WATER INLET PIPE AND OUTLET PIPELINE





- There is no water pressure in the water inlet pipe, and water must be added for the first installation of water pump.
- When installing the water pump, it is forbidden to use too soft rubber pipe for the water inlet pipe to avoid flattening.
- The bottom valve shall be vertical and installed 30 cm away from the bottom of the water to avoid sediment inhalation.
- All connections of the inlet pipeline must be sealed to minimize elbows, otherwise it will not be able to be sucked up.
- The diameter of the water inlet pipe shall be at least the same as that of the water inlet to prevent the hydraulic loss from affecting the water outlet performance.
- When using, pay attention to the water level drop, and the bottom valve shall not be exposed to the water surface.
- When the length of the water inlet pipe is more than 10 m or the lifting height of the water inlet pipe is more than 4 m, the diameter of the water inlet pipe must be greater than the diameter of the water inlet of the electric pump.
- When installing the pipeline, make sure that the electric pump is not under the pipeline pressure.
- In case of special circumstances, the series of water pumps are not allowed to install bottom valve, but in order to avoid solid particles entering the electric pump, the inlet pipeline must be equipped with filter.
- The outlet pipe diameter shall be at least the same as the outlet diameter to minimize the pressure drop, high flow rate and noise.

CONTROL PANEL

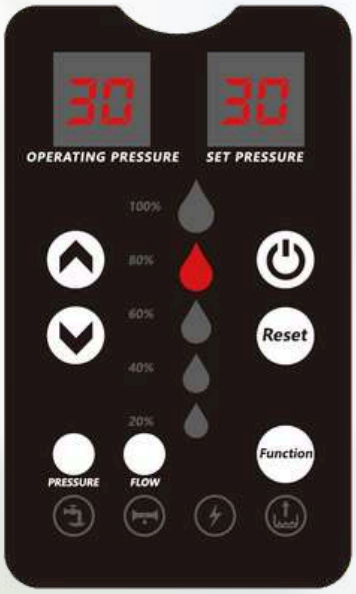

MENU USE

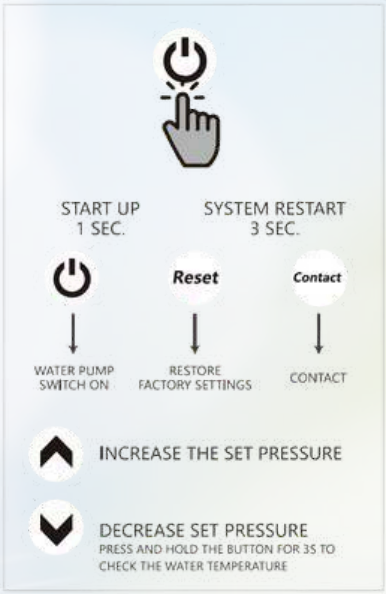

PRESSURE SETTING





Press the up and down keys to set the required pressure value

FAULT BUTTON INDICATOR



WATER PUMP OPERATION



WATER PUMP OPERATION



POWER FAILURE



IMPORT WATER SHORTAGE

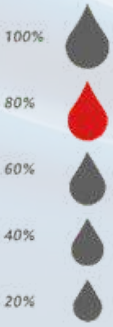

INDICATOR PRESSURE LIGHT

FACTORY MENU KEY OPERATION

(The factory menu is not recommended for users to operate directly. Professionals operate.)

OPERATE	OPERATION METHOD	REMARK
Enter factory menu	Simultaneously long press  key to enter the factory menu.	
Factory menu toggle	After entering the factroy menu, simultaneously long press  key or short press  toggle.	
Factory menu exit	After 10 seconds of no operation, it will automatically exit the factory mode.	

FACTORY MENU CONTENT

MENU CONTENT	MENU SIGN	DEFAULTS	RESTORE IN FACTORY MODE	MENU DESCRIPTION	REMARK
Non-stop fault parameters	P	0.1	YES	Under the premise of checking that the pipeline is completely leak-proof and there is no shutdown failure, increase this value. Increase by 3 each time, preferably not more than 30, increasing this value will increase the fluctuation of shutdown detection. Increase this value, when the water is stopped by mistake, please increase the following parameter of wrong stop	
Error stop fault parameters	t	10	YES	In case of accidental shutdown of water, increase this value by 3 each time, and increase it successively.	
Leak prompt switch	F5	1	YES	1: Leakage promt on, 0: Leakage prompt off.	
Voltage fault misjudgement parameters	F7	3 or 2	YES	If the voltage vaule is correct, this value can be increased to eliminate the misjudgement of the voltage fault. This parameter is the voltage fault count value, do not increase it too much, it will easily lead to the failure of the voltage protection of the driver, resulting in damage to driver. For PFC models, add 1 each time and for non-PFC models add 3 each time. If invalid, please restore the default value.	
Cryogenic protection temperature	A0	3	YES	When the water temperature is lower than this value, in enters into low temperature protection	
High temperature protection temperature	A1	75	YES	Water temperature higher than this value enters high temperature protection	

COMMON FAULT CODES AND TROUBLESHOOTING

ERROR CODE	CORRESPONDING FAULT	TROUBLESHOOTING
E1	Panel and motherboard communication failure	Please check whether the panel cable is connected well, and try plugging and unplugging again. If cannot be resolved, the panel or motherboard has failed.
E2	Stall	Please try to turn the fan blade to see if the water pump impeller is stuck.
E3	Voltage failure,  icon lights up	Please check with a multimeter.
E4	Outlet pressure sensor failure	Check whether the lower pressure sensor interface is in poor contact, check the lower interface, and re-plug it. If it still cannot be solved, replace the pressure sensor.
E5	Controller failure	1. Power off, wait for the panel light to go out, then power on again. 2. If it still cannot be recovered, the motor or driver board is damaged.
E6	Lack of phase	Check whether the motor wire is connected well. Use a multimeter to measure the resistance of the motor wire and see if there is any disconnection.
E7	Overcurrent	1. Check if there is a short circuit in the motor wire. 2. Check the voltage resistance of the motor to see if the voltage resistance is not enough. 3. Re-power on and test, the motor is good, maybe the driver is damaged due to accidental impact.
E9	Water temperature protection	Check whether the water temperature is abnormal
E10	Lack of water,  icon lights up	Check whether the water is really lacking. If there is water, check the water flow switch for models with a water flow switch. For models without a water flow switch, you can enter the factory menu to adjust the water shortage pressure and asjust it to the current pressure.
E11	Leakage,  icon lights up	Check whether the pipeline is leaking, or whether the check valve is leaking, it does not affect the water use, only serves a reminder.
E12	Driver board overheating fault	Wait for the temperature of the driver to drop, and automatically resume operation, or move the pump to a cool and ventilated place.

WATER PUMP MAINTENANCE

Maintenance in operation

1. The inlet pipe must be full of liquid, and it is forbidden to operate the pump in the state of cavitation.
2. Regularly check the motor current value, which shall not exceed the rated current of the motor.
3. After long-term operation of the pump, due to mechanical wear, the noise and vibration of the unit may increase, leakage may occur, and the performance may decline. At this time, the pump shall be shut down for inspection.

If necessary, vulnerable parts (such as bearings, mechanical seals, impellers etc.) can be replaced. The overhaul period of the unit is generally one year.

Mechanical seal maintenance

1. The mechanical unsealing lubrication shall be clean and free of fixed particles.
2. It is forbidden to work under dry grinding.
3. Before starting, turn the pump (motor) for several circles to prevent the graphite ring from breaking and damage due to sudden starting.
4. The seal leakage tolerance is 3 drops/min, otherwise it shall be repaired.
5. When repairing and assembling the mechanical seal, avoid contacting with oil substances, and use soapy water, detergent, etc. to lubricate and reduce resistance.

ebitt
FLUID TECHNOLOGIES

EBITT EUROPE KFT
H-6782 Mórahalom, Szegedi út 108. Hungary Phone: +3662-280-926
Fax: +3662-280-927
export@ebitteurope.com
www.ebitteurope.com

EBITTME PUMPS ENGINES VALVES & SPARE PARTS TRADING CO. L.L.C.
ALSUAIDI, Al Suwaidi Bldg, Al Murar - Deira
P.O. Box 453929 Dubai, UAE
emea@ebitteurope.com
+971 55-454 4187

EBITT FINDUSTRIE (ZHE JIANG) INDUSTRIAL ENGINEERING LIMITED COMPANY
Hangzhou City, Zhejiang Province, China
info@ebitt.com.cn
+86 15168651662

EBITT ASIA PACIFIC PTE LTD (EAP Singapore)
226 Jalan Eunos #04-128. Singapore 415869 Phone: (65) 98393745
info@ebitt-asiapac.com

EBITT TÜRKİYE
Koçullu Mah. Doğru Sok. No:6 34799 Çekmeköy / İstanbul
info@ebitt.com.tr
www.ebitt.com.tr